RoHS Compliance

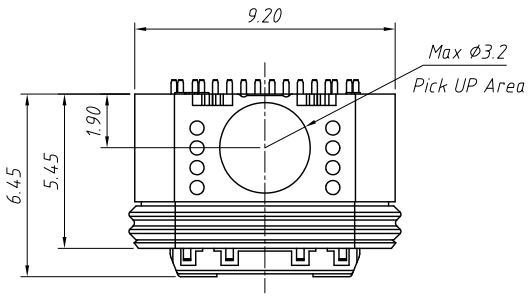

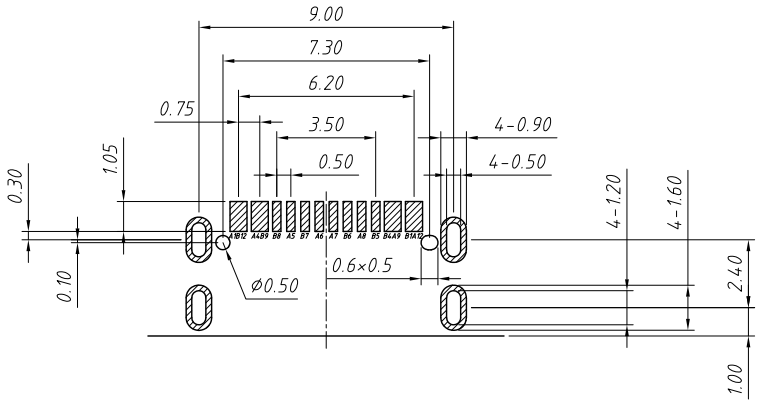

Recommended PCB Layout(Top View)
Thickness T=0.8mm

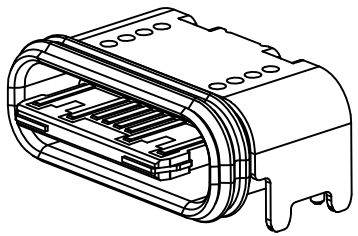

3D VIEW

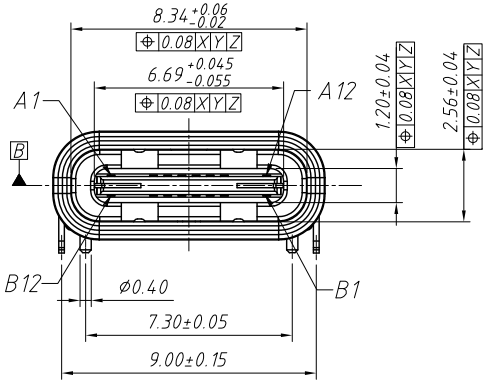

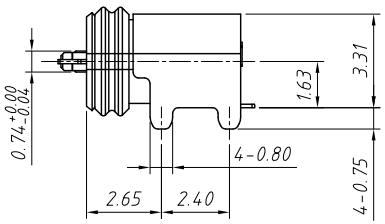

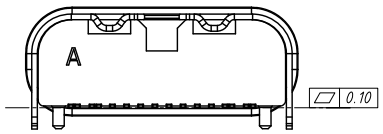

Electrical Characteristics:
Voltage/Current Rating:5V/3.0A
Dielectric Withstanding Voltage:100VAC
Temperature Range: -30°C ~ + 85°C
Contact Resistance:40mΩ Max
Insulator Resistance:100MΩ Min
Initial Insertion Force:5-20N;
Extaction Force:8-20N
After Durability:10000 Cycles,
Insertion Force 5-20N ,
Extaction Force:5-20N
Waterproof Grade:IPX7

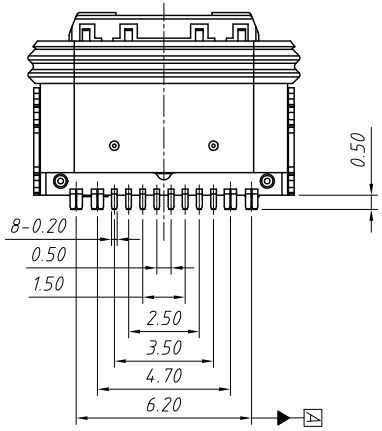

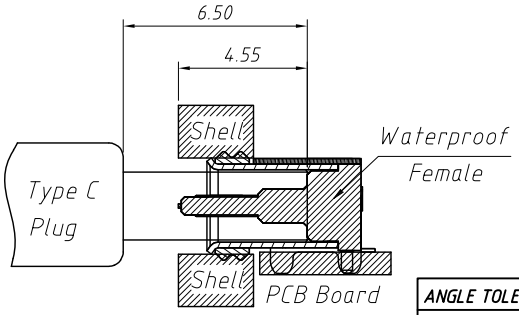

Assembly diagram

TYPE C 16P ASSIGNMENTS

A1	A2	A3	A4	A5	A6	A7	A8	A9	A10	A11	A12
GND			VBUS	CC1	DP1	DN1	SBU1	VBUS			GND
GND			VBUS	SBU2	DN2	DP2	CC2	VBUS			GND
B12	B11	B10	B9	B8	B7	B6	B5	B4	B3	B2	B1

ANGLE TOLERANCE	PROJECTION		Description:	USB Type-C 16P SMT IPX7 Waterproof Connector Assembly Type
±3°				
GENERAL TOLERANCE	UNITS	mm	KLS P/N:	L-KLS1-PUB-003
x.x ±0.30	SHEET SIZE	A4		
x.xx ±0.20	Draw:	Daniel	2020-11-11	NingBo KLS ELECTRONIC CO.,LTD.
x.xxx ±0.10	Check:	Daniel	2020-11-11	