RoHS Compliance

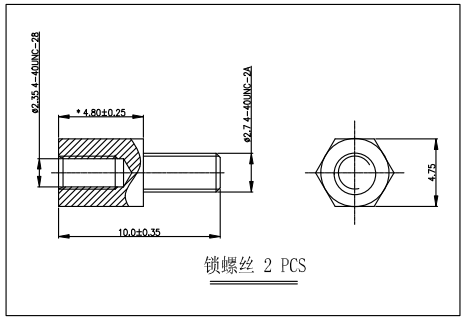

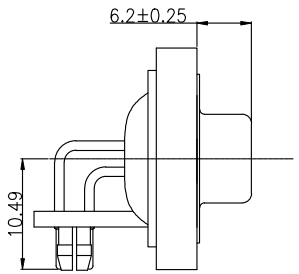

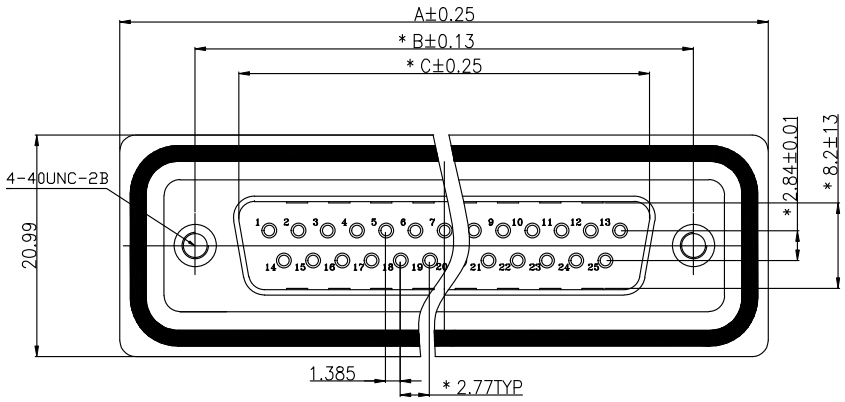

PIN	A	B	C	D
9	39.40	24.99	16.92	19.92
15	47.72	33.32	25.35	28.35
25	61.44	47.04	38.96	41.96
37	77.9	63.50	55.42	58.42

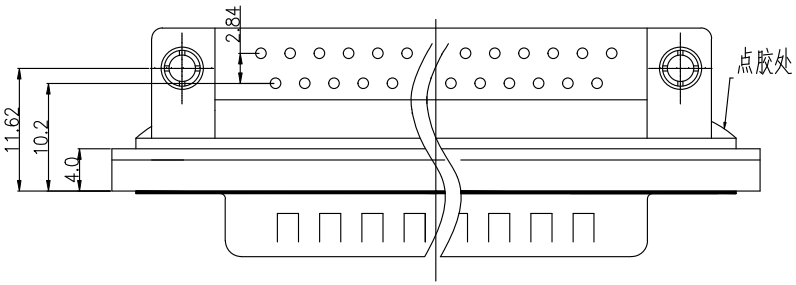

Description:

1 Features:

Waterproof grade: IP66 ~ IP68 (temporary invasion did not, the biggest extreme pressure 1.3psi or 1 m water depth)

Rated voltage: 500V AC MIN

Rated current: 5A

Contact resistance: 30mΩ MAX.

Insulation resistance: 5000MΩ MIN.at 500V DC

Rated voltage: 500V AC RMS for 1Minute

Temperature range:-55C ° ~ +105 C °

Wire core range: 22AWG ~ 26AWG

(2) Material:

Plastic core: PBT +30% G.F (UL94V-0)-WH

Car PIN: C3604 (BRASS), gold-plated 1U ″, 3u″, 10u ″, 15u″, 30u ″, 50u″

Iron Shell: SPCC, nickel-plated

3 Note:

a. encollage can not have bubbles, glue seepage phenomena.

b. spray tested 48H can not have oxidation rusting.

c. Finished not have a curved needle, R angular inconsistencies and other undesirable.

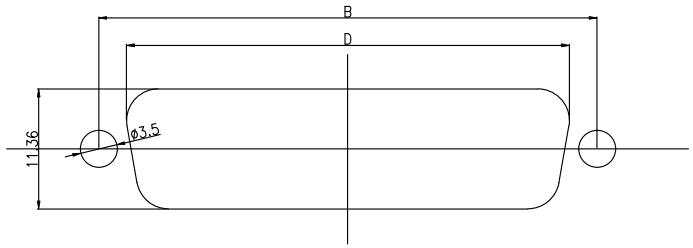

ANGLE TOLERANCE	PROJECTION		Description:	
±3°			Waterproof D-sub (DR 2 Row PCB Type)	
GENERAL TOLERANCE	UNITS	mm	KLS P/N:	L-KLS1-127-09-M-B
x.x ±0.30	SHEET SIZE	A4		
x.xx ±0.20	Draw:	Daniel	2018-07-10	NingBo KLS ELECTRONIC CO.,LTD.
x.xxx ±0.10	Check:	Daniel	2018-07-10	