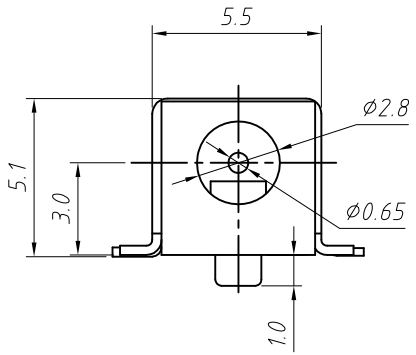

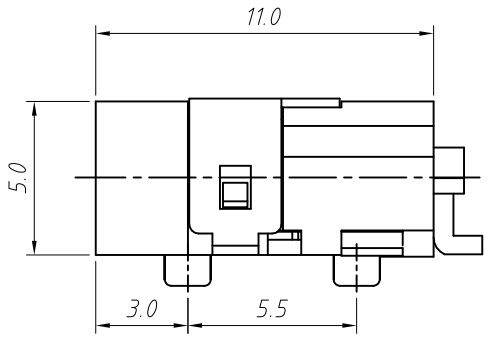

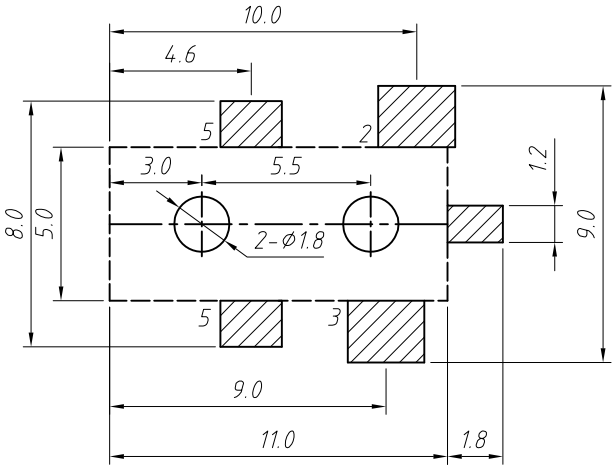

PCB LAYOUT TOP VIEW

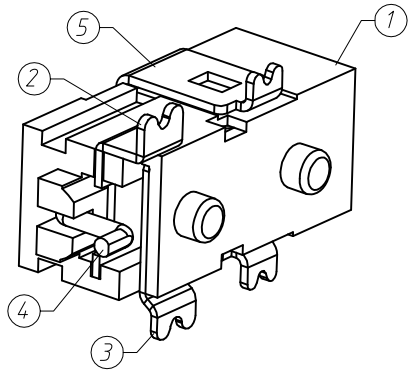

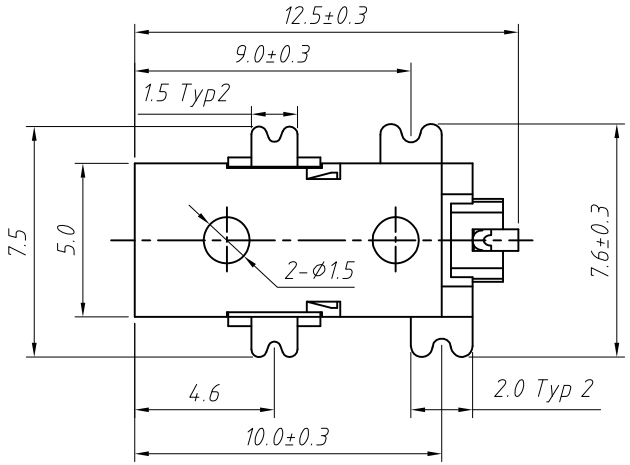

SCHEMATIC

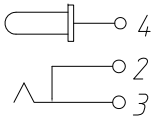

SPECIFICATION

Rated Load:DC 30V 0.5A

Contact resistance:30mΩ, max

Insulation resistance:100MΩ, min

Withstand Voltage:AC500V

Actuating Force:3-20N

Life:5000 cycles

Operating Temperature:-30°C-70°C

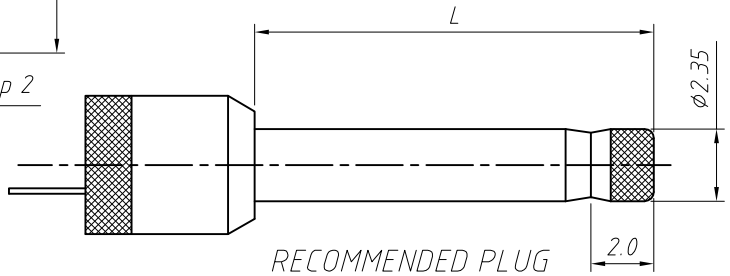

RECOMMENDED PLUG

NO.	Description	QTY	Material	Plating
1	Housing	1	PA9T	---
2	Flat Piece	1	Brass	Ag-Plating
3	Spring	1	Bronze	Ag-Plating
4	PIN	1	Brass	Ag-Plating
5	Contact Foot	1	Brass	Ag-Plating

GENERAL TOLERANCE	PROJECTION		Description:
X. ±0.50	UNITS	mm	DC POWER Jack SMT HORIZONTAL
.X ±0.25	SCALE	1:1	
.XX ±0.10	Draw by:	Jenny	KLS P/N: L-KLS1-TDC-003
ANGLE TOLERANCE	Check by:		
X. ±5°	Date	2019-03-01	NingBo KLS ELECTRONIC CO.,LTD.
.X ±3°			
.XX ±2°	SHEET	1 OF 1	