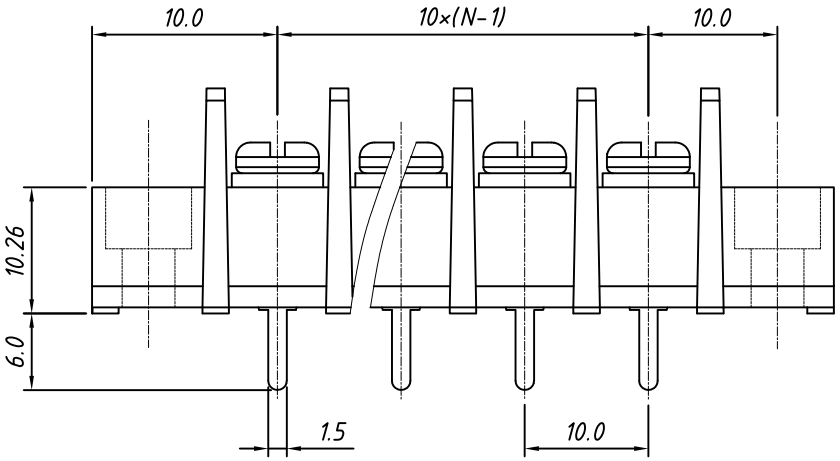

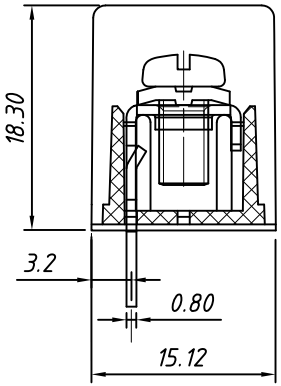

SECTION A-A

Material

Screw: M4.0, Steel, Ni Plated

Pin header: Brass, 0.8t, Tin Plated

Housing: PA66, UL94V-0,Black

Electrical

Rated voltage: 300V

Rated current: 20A

Wire range: 22~12AWG 4.0mm^2

Contact Resistance: 20 m Ω

Insulation resistance: 500MΩ/DC500V

Withstand voltage: AC2000V / 1 min

Mechanical

Temp. Range: -40 °C ~ + 105 °C

Torque: 1.2Nm (10.6Lb.in)

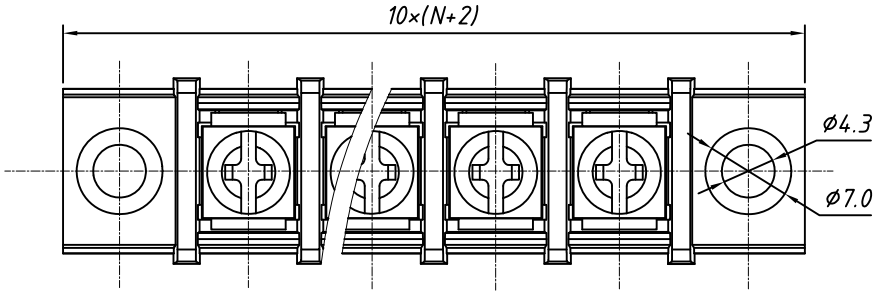

Order Information

L-KLS2- 55 B - 10.0-XXP-A

- A: With Ears
- No.: of Pole
- Pitch: 10.0mm
- Pin Type:
- Barrier Terminal Block Without Cover
- RoHS

GENERAL TOLERANCE	ANGLE TOLERANCE	PROJECTION		Description:
X. ±0.60	X. ±5°	UNITS	mm	Barrier TERM BLOCK 10.0MM
.X ±0.38	.X ±3°	SHEET SIZE	A4	
.XX ±0.25	.XX ±2°		KLS P/N:	KLS2-55B-10.0-XXP-A
Draw by: Date	2018-02-26			
Check by:: Date	2018-02-26			
SCALE	SHEET	OF		

NingBo KLS ELECTRONIC CO.,LTD.