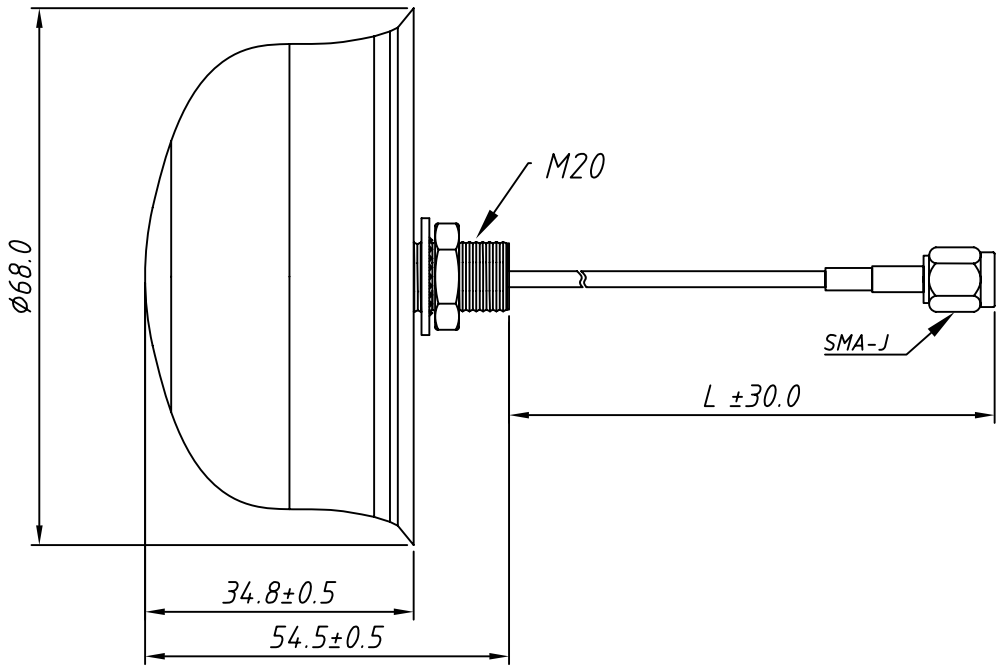

Specification:

Frequency : 824~960/1710~2170MHz

Band width: 136/460MHz

Gain : 3dBi

Vswr : 2.0 Max.

Impedance : 50 Ω

Polarization : Vertical

Radiation : OMNIDIRECTIONAL

Max power : 10W

Connector : RP SMA-J

Cable: RG174, Black

Length:3000mm

Mounting Method:Screw

Lightning protection: DC Grounding

Operating Temperature : -30°C to +70°C

Order Information

L-KLS1- 3G 31 010 3000

RoHS

Antenna Frequency :

3G: 824~960/1710~2170MHz

Con. Code: 010: Standard SMA-J Connector

3000: Cable Lenges

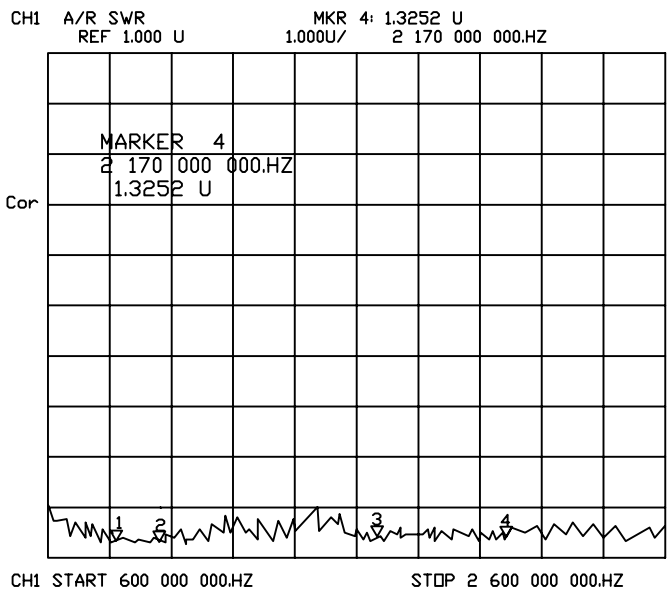

GENERAL TOLERANCE	ANGLE TOLERANCE	PROJECTION		Description:
X. ±0.60	X. ±5°	UNITS	mm	3G Antenna
.X ±0.38	.X ±3°	SHEET SIZE	A4	
.XX ±0.25	.XX ±2°		KLS P/N:	KLS1-3G31010XXXX
Draw by: Date	2016-11-11			
Check by:: Date	2016-11-11			
SCALE	SHEET	OF		

KLS ELECTRONIC CO., LTD.